B51x5

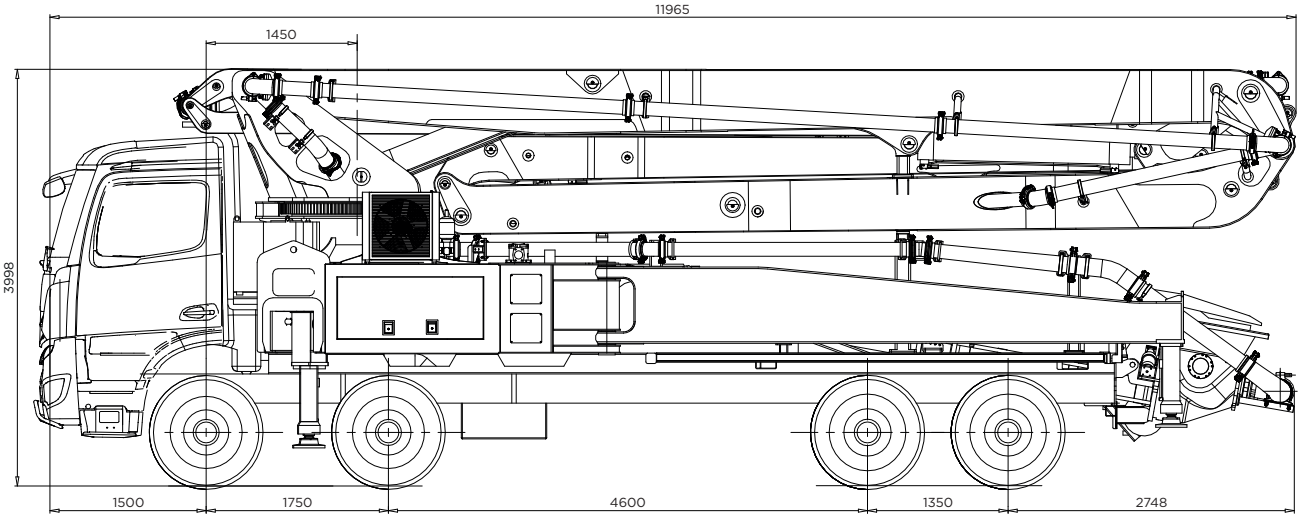

dimensions are informative and depend on the truck composition chosen

PUMPING UNIT XJG5370	
max. concrete flow rate*	160 m^3/h
max. concrete pressure*	80 bar
max. number of strokes	29/min
stroke length	1800 mm
diameter of concrete cylinder	260 mm
hopper capacity	700 l

*the data given are theoretical valuesand cannot be reached simultaneously.

- powered by PTO transmission of the truck
- s-valve made of wear-resistant cast iron, equipped with a welded wear layer
- wear ring and wear plate with compensation system with inlay of tungsten carbide steel
- hydraulically driven and temperature controlled oil cooler
- mixing shaft with removable blades, fitted with a welded wear layer
- automatic grease lubrication system, hydraulically driven
- thick-walled 7″ outlet bend with flushing hole
- concrete cylinder with hard chrome inner wall
- simply designed open hydraulic system
- electro-hydraulic controlled pumping unit
- separate control for pumping and s-valve cylinders supported with accumulator
- fuel-saving flow and speed control
- Rexroth hydraulic pumps with variable displacement
- aluminium cover with 2 led work lights

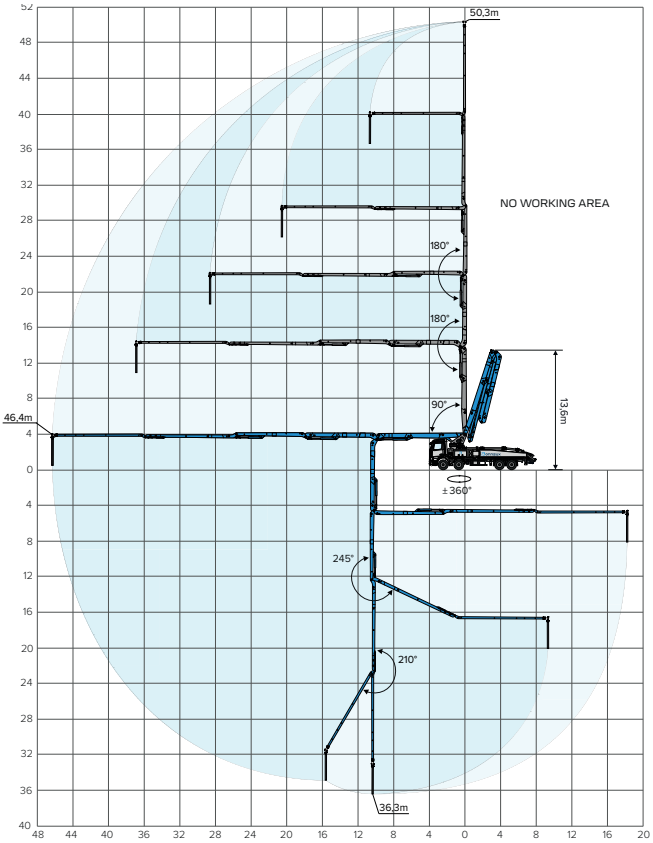

BOOM B51x5	
material	high-strength structural steel
strength calculation	FEM analyse
folding system	type 'z'
number of sections	5
max. vertical range	50,3 m
max. horizontal range	46,4 m
max. depth range	36,3 m
min. unfolding height	13,6 m
rotation angle	± 360°
turning angles	90°- 180°- 180°- 245°- 210°
control valve	proportionial
max. hydraulic pressure	380 bar
pipeline	Ø 5" (DN 125)
end hose	Ø 5" (DN 125) - 3 m

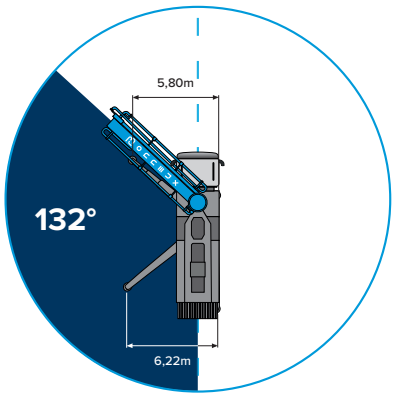

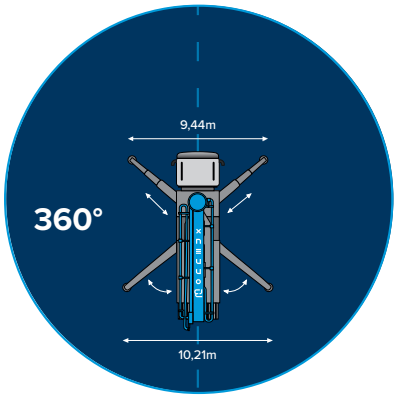

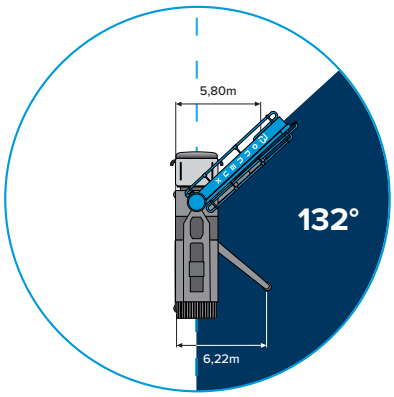

RADIO REMOTE CONTROL
2 TRANSMITTERS + 1 RECEIVER

HYDRAULIC CONTROL BOOM
PROPORTIONAL DIRECTIONAL
SPOOL VALVE

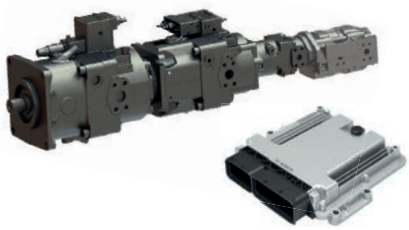

HYDRAULIC PUMPS
ELECTRONIC CONTROL UNIT
BODAS HARDWARE
CONTROLLER RC SERIES

our products are constantly evolving, which means specifications may vary

BONNEUX MACHINERY BV
Poort sint-truiden, Nijverheidslaan 5485
3800 Sint-Truiden - Belgium

info@bonneux.be
+32 11 59 33 83

www.bonneux.be
VAT BE 0458 873 841